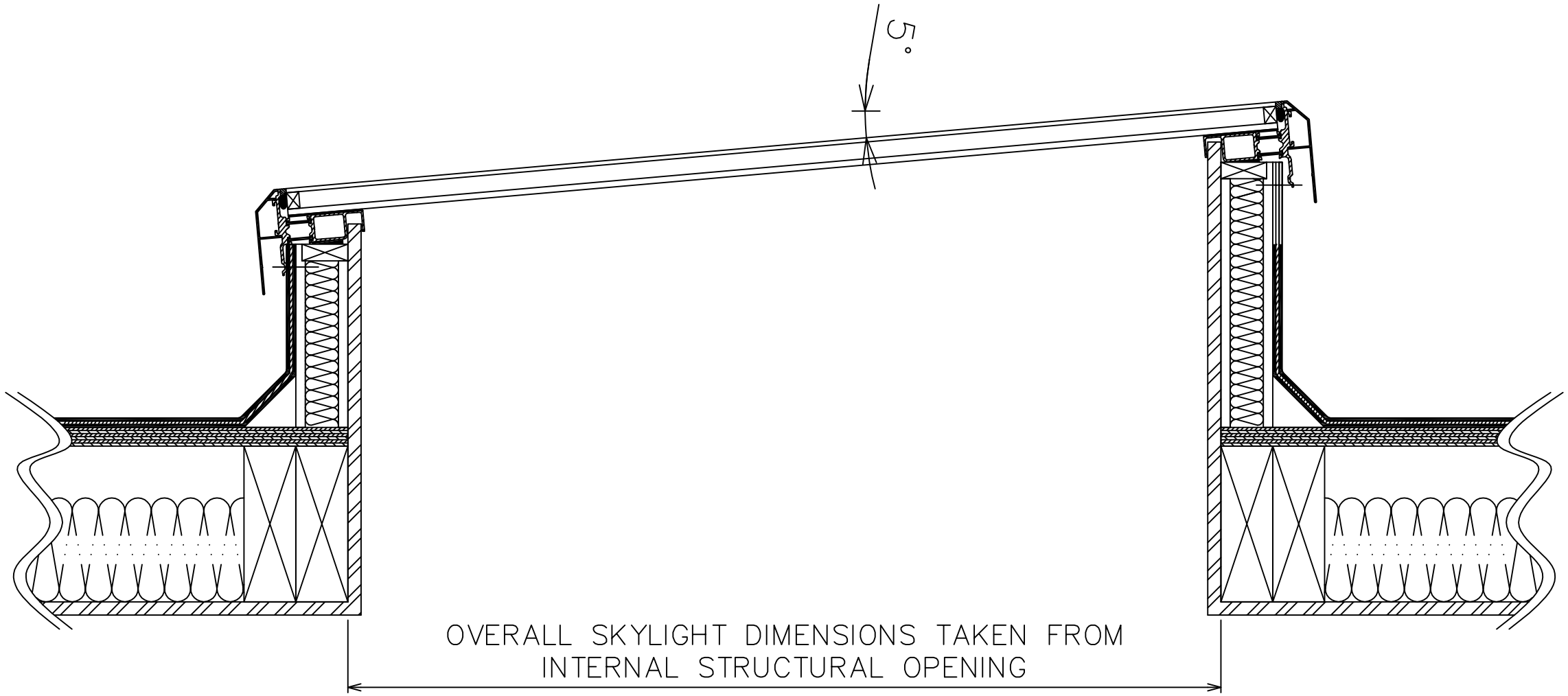

Section Through Width of Skylight (Fixed)

Sunsquare Ltd
5A Barton Road Trading Estate
Bury St Edmunds
Suffolk
IP32 7BE
T. 0845 226 3172 ;F. 0845 226 3173
info@sunsquare.co.uk; www.sunsquare.co.uk

sun

Rev:	Description:	By:	Date:

Product: SkyView	Scale: 1:5 @ A3	Drawing No.: SKYVIEW-STD-005
Description: Section Through Skyview Length	Date: May 2011	Revision: .
	Drawn By: AC	